WIB-60DFP

SWISSCAVE

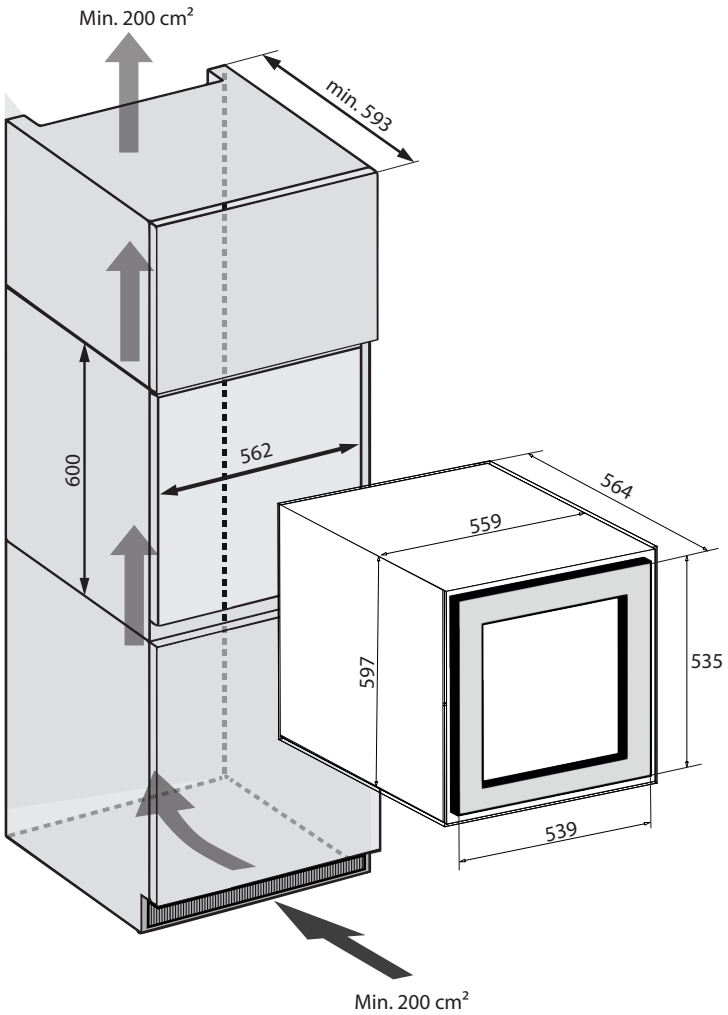

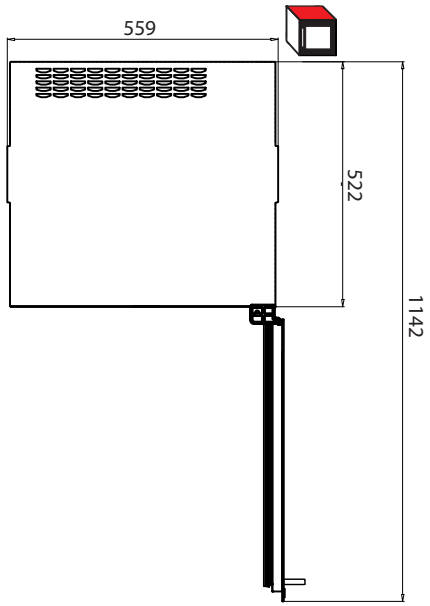

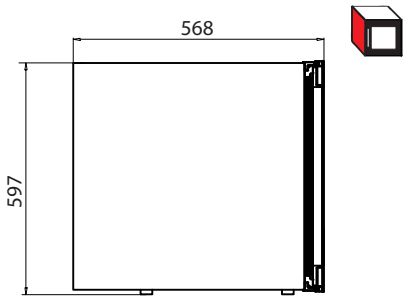

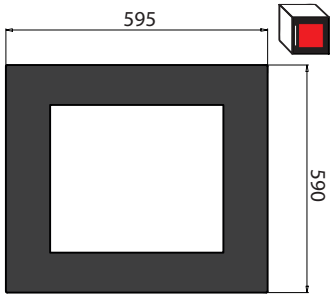

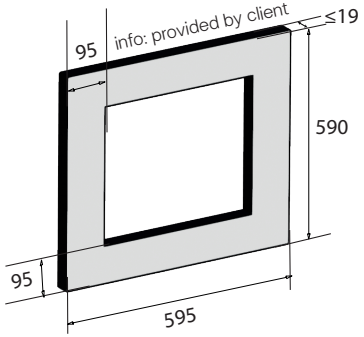

In-Built drawing for WIB-60DFP

Copyright SWISSCAVE AG. All rights reserved.